DRAWING NO.
SU1970-03

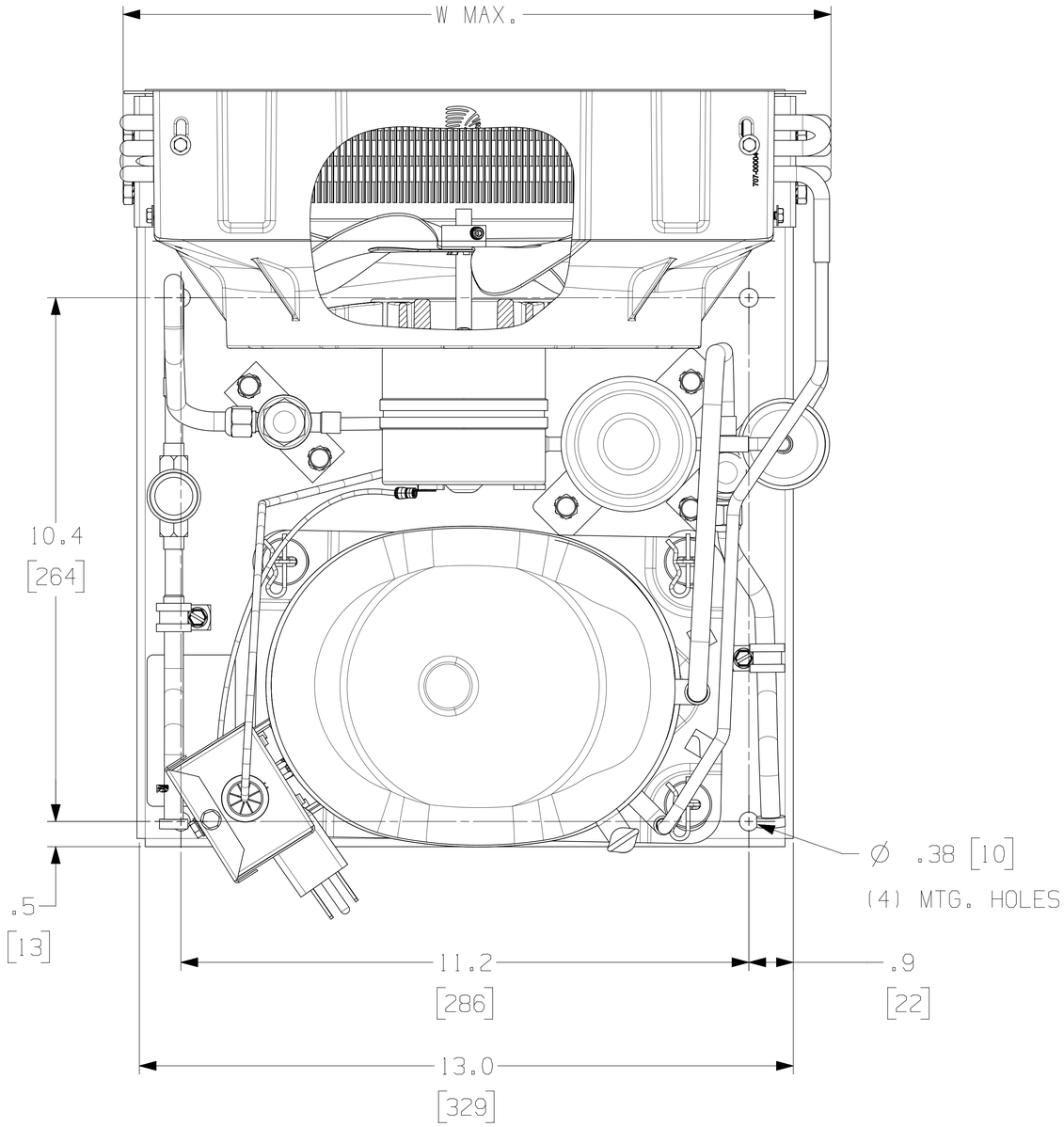

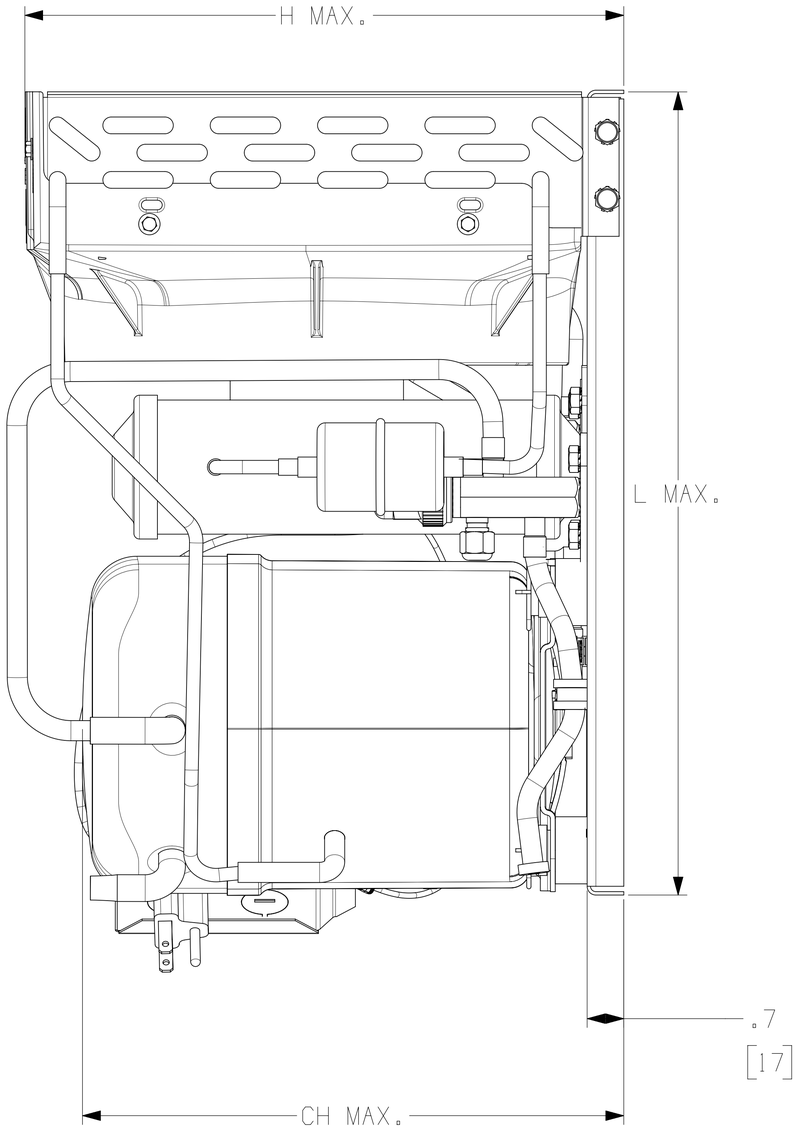

L	W	H	CH
15.0 [380]	14.0 [356]	11.5 [291]	10.1 [257]

NOTE!
DIMENSIONING = INCHES [MILLIMETERS]

3D.VNXB

ENGLISH

Q.A. SYMBOLS
✱ = CATEGORY I
▲ = CATEGORY II
■ = CATEGORY III
= CATEGORY IV

AK

BEL	LC	CHANGE	DATE
C	--	ECR9025 SIGNIFICANT CLASS REPOSITIONED WITH DRAWING	BD 25APR14
B	--	ECR9000 VALVE REPLACED 96693 #VS 58630	TS 14NOV13
A	--	ECR9000 PROCESS TUBE ADDED AND GROUNDING WIRE	TS 22MAR13
--	--	EC42620	--

PROPRIETARY TO ARIN HOLDS THE PROPRIETARY RIGHTS TO THIS DOCUMENT AND CONTENTS IN PROPRIETARY AND CONFIDENTIAL MANNER. ANY REPRODUCTION IN WHOLE OR IN PART IS PROHIBITED WITHOUT THE PRIOR WRITTEN CONSENT OF TECUMSEH PRODUCTS COMPANY. NEITHER THE INFORMATION CONTAINED HEREIN NOR THE DOCUMENT ITSELF MAY BE DISCLOSED TO THIRD PARTIES WITHOUT THE PRIOR WRITTEN CONSENT OF TECUMSEH PRODUCTS COMPANY. THIS DOCUMENT AND THE INFORMATION CONTAINED HEREIN MUST BE KEPT IN A SAFE PLACE. UNAUTHORIZED USE OF THIS DOCUMENT OR DISCLOSURE OF THE INFORMATION CONTAINED HEREIN IS PROHIBITED. THIS DOCUMENT MAY NOT BE REPRODUCED OR TRANSMITTED IN ANY FORM OR BY ANY ELECTRONIC OR MECHANICAL MEANS, INCLUDING PHOTOCOPYING, RECORDING OR ANY INFORMATION STORAGE AND RETRIEVAL SYSTEM, WITHOUT THE PRIOR WRITTEN PERMISSION OF TECUMSEH PRODUCTS COMPANY. THIS DOCUMENT AND THE INFORMATION CONTAINED HEREIN MAY NOT BE LOANED TO ANY PERSON OR FIRM WITHOUT PRIOR WRITTEN CONSENT OF TECUMSEH PRODUCTS COMPANY. ANY REPRODUCTION OR DISTRIBUTION OF THIS DOCUMENT, OR DISCLOSURE OF ITS CONTENTS OR THE CONTENTS THEREOF, WITHOUT PRIOR WRITTEN PERMISSION IS STRICTLY PROHIBITED. UNAUTHORIZED USE OF THIS DOCUMENT MAY VIOLATE STATE AND FEDERAL LAWS. BY TAKING DELIVERY OF THIS DOCUMENT, YOU AGREE TO HOLD THE INFORMATION CONTAINED HEREIN IN SAFE PLACE. IF YOU DO NOT AGREE TO THE FOREGOING, YOU MUST RETURN THIS DOCUMENT TO TECUMSEH PRODUCTS COMPANY AT ANN ARBOR, MI, U.S.A. UNLESS YOU HAVE A WRITTEN AGREEMENT WITH TECUMSEH PRODUCTS COMPANY GOVERNING THE USE OF THIS DOCUMENT. YOU ARE PROHIBITED FROM USING THIS DOCUMENT FOR ANY PURPOSE.

DO NOT SCALE THIS DRAWING. UNLESS OTHERWISE NOTED MATERIALS MUST MEET SPECIFICATIONS AS RECEIVED AT PRODUCTION.

DIS.CODE --

NAME HERMETIC CONDENSING UNIT

DWN.	CK.	APR.	SCALE
ASHOK 04SEP12	ON FILE	ON FILE	1:1 & NOTED

THIS PRINT SUPERSEDES ALL PRINTS PRIOR TO

TECUMSEH PRODUCTS CO.
ANN ARBOR, MICHIGAN

MATERIAL NOTED

DRAWING NO. SU1970-03

BANNER